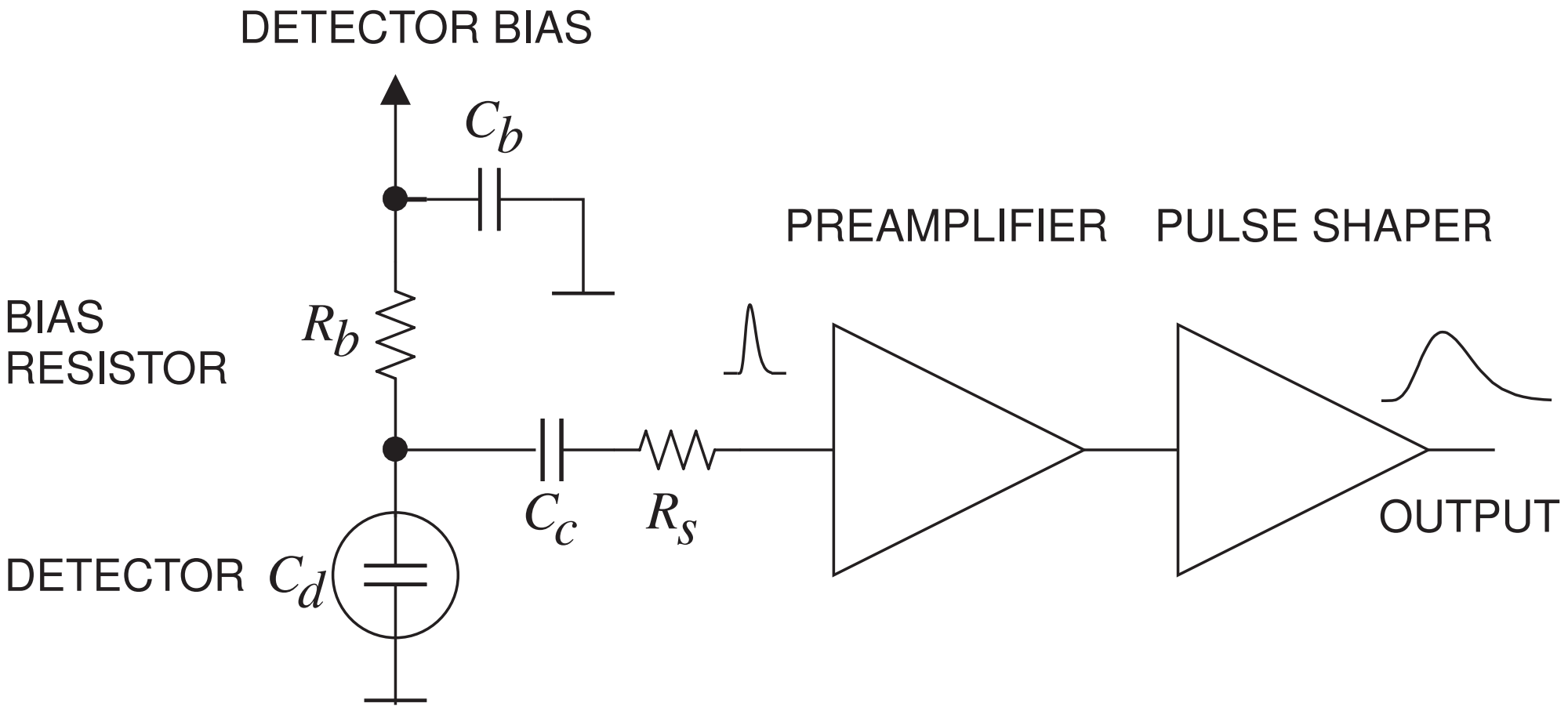
DETECTOR BIAS
C_b
PREAMPLIFIER
PULSE SHAPER
BIAS
RESISTOR
R_b
C_c
R_s
OUTPUT
DETECTOR
C_d